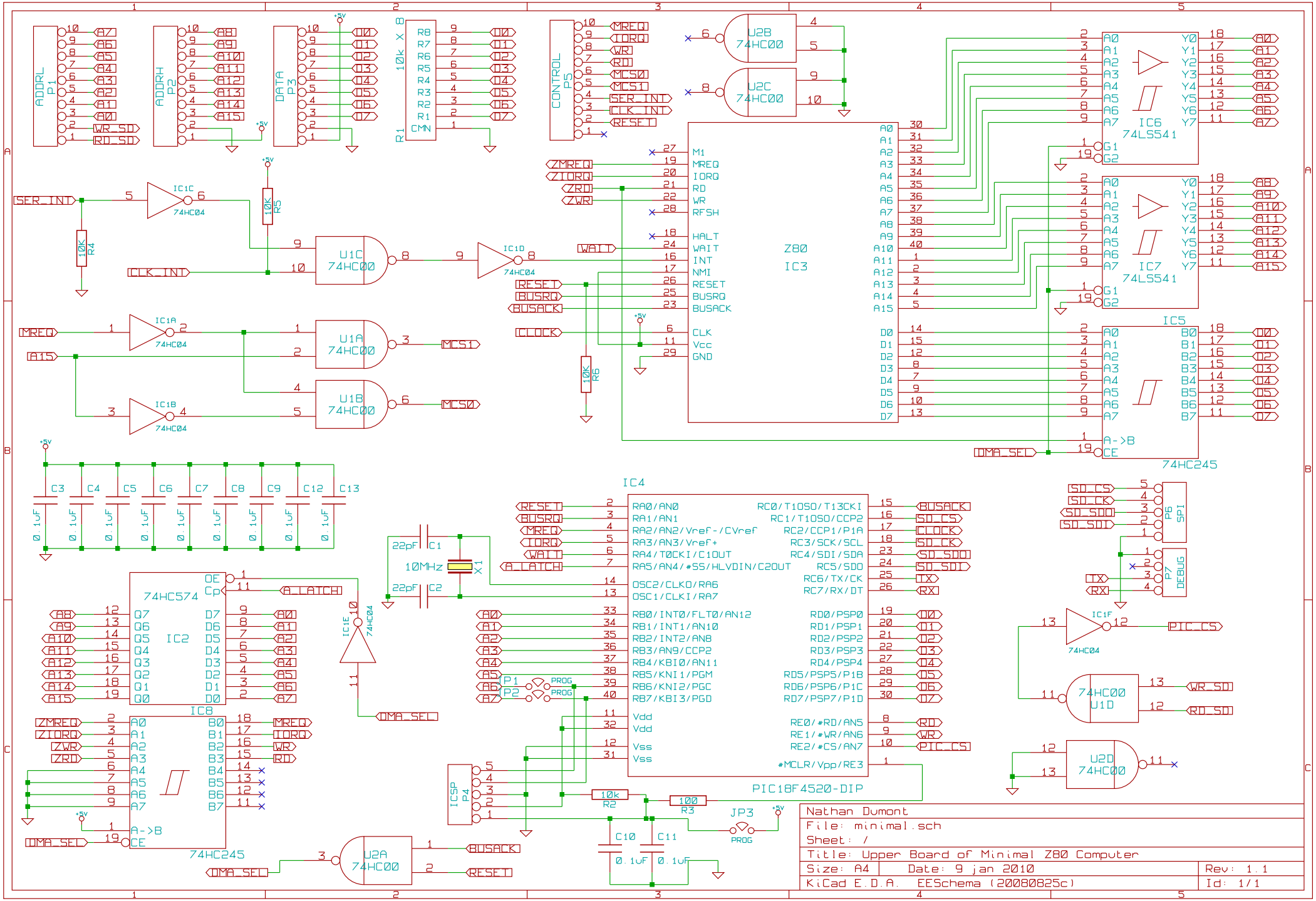
ADDRL P1
ADDRH P2
DATA P3
10k X 8 R1
CONTROL P5
U2B 74HC00
U2C 74HC00
Z80 IC3
IC6 74LS541
IC7 74LS541
IC5 74HC245
IC1C 74HC04
IC1D 74HC04
IC1A 74HC04
IC1B 74HC04
U1C 74HC00
U1A 74HC00
U1B 74HC00
IC4
PIC18F4520-DIP
74HC574 IC2
IC8 74HC245
IC1E 74HC04
IC1F 74HC04
U1D 74HC00
U2D 74HC00
U2A 74HC00
P6 SPI
P7 DEBUG
ICSP P4
JP3
10MHz X1
22pF C1
22pF C2
C3 C4 C5 C6 C7 C8 C9 C12 C13
0.1uF
R4 10K
R5 10K
R6 10K
R2 10k
R3 100
C10 C11
Nathan Dumont
File: minimal.sch
Sheet: /
Title: Upper Board of Minimal Z80 Computer
Size: A4
Date: 9 jan 2010
Rev: 1.1
KiCad E.D.A. EESchema (20080825c)
Id: 1/1